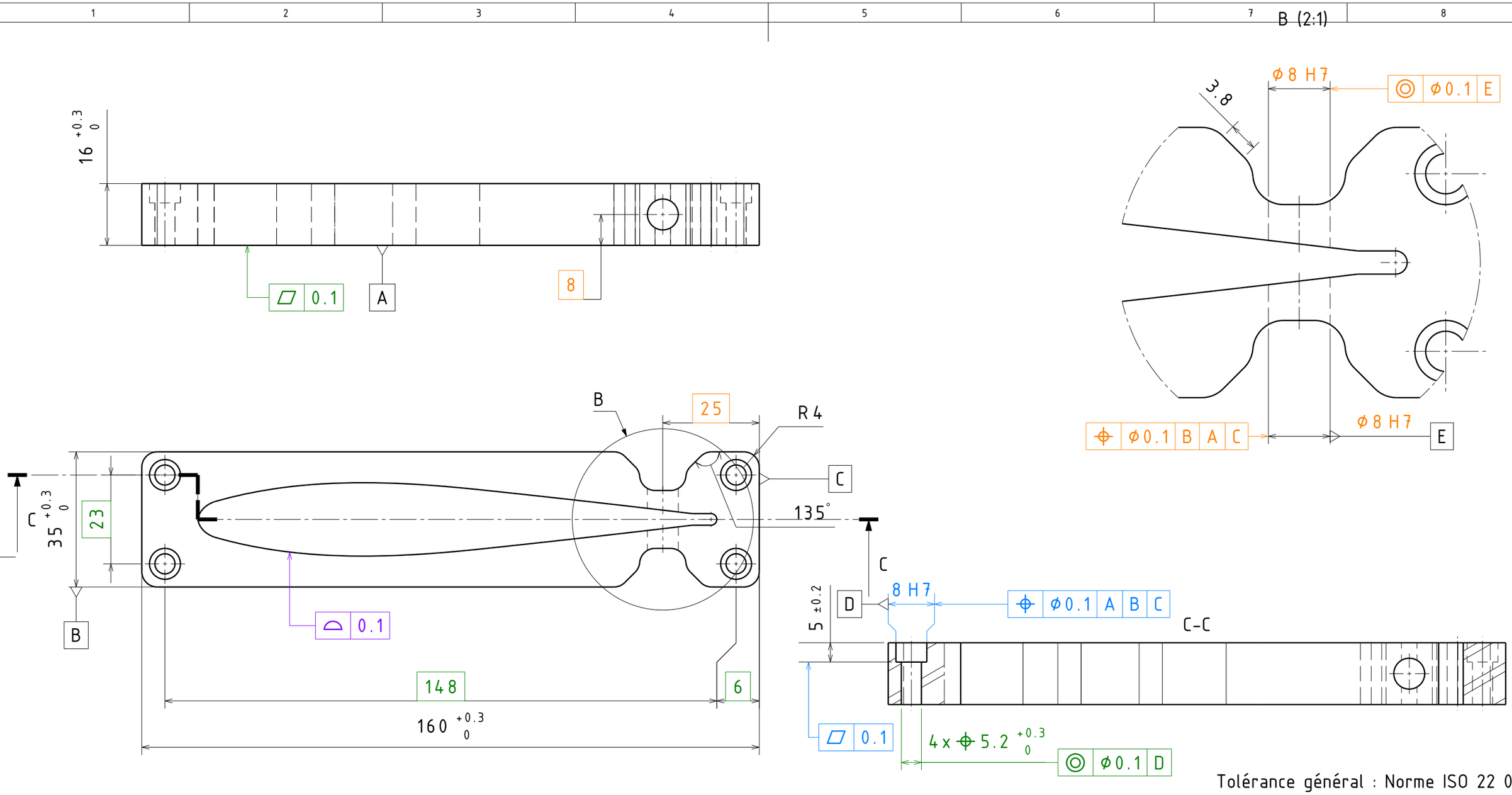

DESIGNED BY: TFEUILLETTE DATE: 13/05/2024	Pièce: Arrêt Goupille		M
			L
	Sous-ensemble: Propulsion Avant		K
			J
FILE NAME PART : EB24-Pav-SDW-Arrêt goupille	Système: Energy Boat 2024		I
			H
COLLAB SPACE: Energy Boat	BTS Conception des Produits Industriels		G
			F
SIZE: A3	Lycée Louis Armand-Nogent sur Marne		E
			D
SCALE: 1:1 / WEIGHT (KG): 0.147	MATERIAL: EN-AW-5086	SHEET 1 / 1	C
			B
This drawing is our property; It can't be reproduced or communicated without our written agreement.			A

A3